McGill University

PHYS 101
(Introduction to Mechanics for the Life Sciences)

FINAL EXAM

December 19, 2011
2:00 PM – 5:00 PM

Examiner: K.J. Ragan x6518
Associate Examiner: J. Crawford x7029

Student name:
ID:

The exam comprises two parts on seven pages (including this page): 8 short answer questions, and 7 problems. A 3-page formula sheet is attached to the back of the exam. No books or notes of any kind are allowed. Calculators are allowed.

Answer **all the short answer questions** with a few words or a few short phrases.
For the problems, show all your work.

The short answer problems are worth four points each, and the problems are worth 10 points each. Put all answers in the **answer booklets** provided (**nothing** on this exam sheet will be marked!), and return this exam paper with the booklet(s).

Good luck !

Short answer questions (answer all): you should not need to do any calculations for these questions, and should answer in **a few words, a few short phrases, or a simple sketch. Explain your reasoning – don't just quote an answer.** In some cases you might find it useful to quote an appropriate formula.

1) [4 pts] A ray of light is refracted through three different materials, as shown in the figure. Rank the materials according to their index of refraction, from greatest to least, explaining your reasoning.

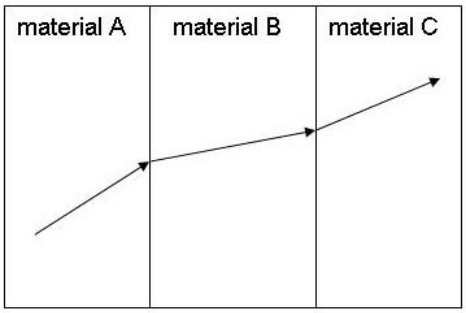

2) [4 pts] A basketball is rolling without slipping across the floor. Beside it and parallel to it, a block of ice of the same mass as the basketball slides (assume that there is no friction between the ice and the floor) at the same speed. The two objects encounter a ramp sloping upwards. Which object will go further up the ramp, or will the two objects reach the same height? Explain your answer.

3) [4 pts] You're at the park watching a child on a swing (you're standing directly in front of the child). The kid has an annoying whistle that he's blowing. Where, in his motion, do **you** perceive the highest frequency? Where, in his motion, does **he** perceive the highest frequency? Explain your answers.

4) [4pt] Two objects are at rest on a horizontal frictionless surface. Object 1 has a greater mass than object 2.

   A constant force F is applied to object 1 and it accelerates through a distance d in a straight line. Now the same force F is applied to object 2. When object 2 has accelerated through the **same** distance d, compare the momenta (p) and energies (E) of the two objects. Explain your reasoning.

5) [4 pts] In the diagram below, a mystery lens is hidden behind the shaded rectangle. Determine (a) the type of lens, (b) the type of image, and (c) the sign of the magnification. Explain your answers.

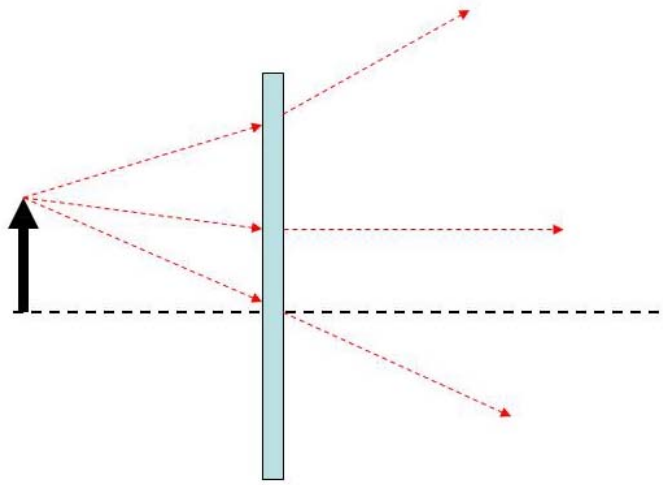

6) [4 pts] Draw **displacement** graphs for the fundamental (frequency f) and the **first two** harmonic frequencies above the fundamental, for a **closed tube**. How many nodes and anti-nodes does the highest of these three frequencies have in the tube?

7) [4 pts] On a lovely summer's day, you're watching your nephew on a trampoline (and idly thinking about Physics 101, which you realize you miss deeply). As he warms up, he bounces gently on the trampoline but never leaves it. Is his motion simple harmonic motion? Later, he bounces with larger amplitude and gets several meters into the air above the trampoline. Is this simple harmonic motion? Explain and justify your answers.

8) [4 pts] A man standing in an upwards-moving elevator drops a coin as the floor of the elevator passes the third floor (there's a hole in the floor of the elevator so the coin drops down the elevator shaft). At the same time, a person standing motionless on the third floor drops a coin which also falls to the bottom of the elevator shaft. Which coin arrives at the bottom first? Which coin arrives with the higher speed? Explain your reasoning.

Long problems (do **all** of them). Show all your work!

1) [10 pts] An observer is looking at the lens-mirror combination shown in the diagram (which is **not** to scale!). She sees two real images that are the same size, and in the same location – one is upright, and one is inverted. Both images are 1.50 times larger than the object. The lens has a focal length of f=10.0 cm, and the mirror and lens are 40.0 cm apart.

a. Explain why there are two images, and draw **two** ray diagrams – one for each image.

b. Determine the focal length f of the mirror, and the position of the object and images.

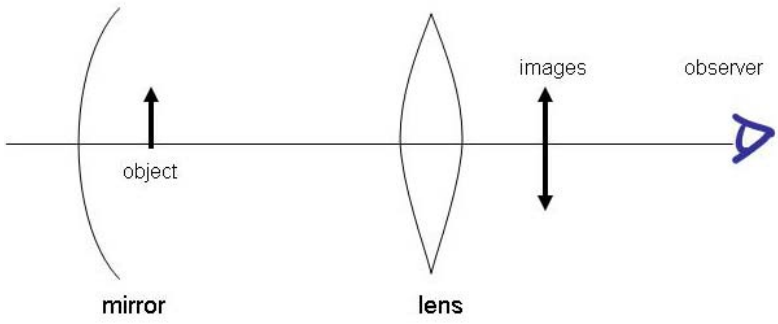

2) [10 pts] In the drawing below, two blocks are on a frictionless surface and at rest. A bullet, of mass 4.00 g and with initial velocity v_b=+355 m/s, hits the first (left-hand) block and passes completely through it and embeds itself in the second block. Both blocks are moving after the collision. Block 1 has a mass of 1.15 kg (ignore any mass loss due to the collision) and a velocity of +0.550 m/s after the collision. Block 2 has a mass of 1.53 kg before the collision.

a. What is the velocity of block 2 and the bullet (together) after the collision?

b. Is the overall collision elastic? If not, what are the kinetic energies before and after the collision?

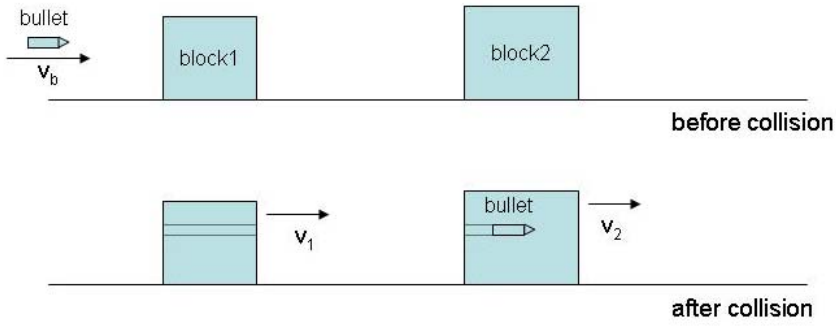

3) [10 pts] In the hammer-throw event (an Olympic athletics event; see the figure below), the "hammer" (which is actually a ball attached to a wire and handle) is spun around (and around and around…) by the athlete before being released. The hammer has a mass of 7.257 kg (ignore the additional mass of the wire and the handle) and the wire is 1.215 m long. The current world record throw is 86.74 m. In what follows, ignore the height from which it is released, but assume that the angle from the horizontal is 22.0 degrees. Also ignore the length of the athete's arms..

a. What is the speed of release of the hammer for the world record throw distance, currently 86.74 m?

b. What force does the athlete apply to the hammer just prior to release in this throw?

c. How many turns per second is the athlete making just prior to release?

4) [10 pts] In the figure below, an external force F is applied to the lower block (mass = 30.0 kg); the upper block (mass = 15.0 kg) is attached to a spring of spring constant k=325 N/m. There **is** friction at the interface between the lower block and the horizontal surface (μ_k = 0.600) **and** between the two blocks (μ_s = 0.600). The force F is **increasing** such as to keep the blocks moving at a constant speed. At the instant the upper block starts to slip on the lower block, find:

a. The distance by which the spring is compressed.

b. The magnitude of the force F.

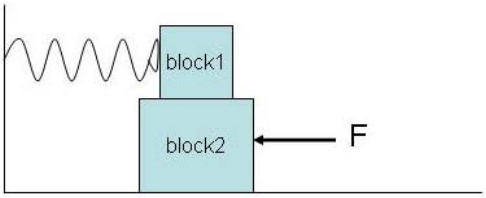

5) [10 pts] Herring (a type of fish) have a silvery appearance that provides camouflage in sunlit waters. It is provided by “platelets”, alternating layers of crystalline guanine (index of refraction n=1.80) and cytoplasm (n=1.333). In one platelet, the guanine layers are 74 nm thick and the cytoplasm layers are 100 nm thick. In the figure below, we show only one layer of each, but in fact there are many. Assuming vertical incidence of white light (containing all wavelengths between about 300 nm and 700 nm), what vacuum wavelengths (ie, wavelengths in vacuum or in air) will give all of the reflections shown in the diagram in phase?

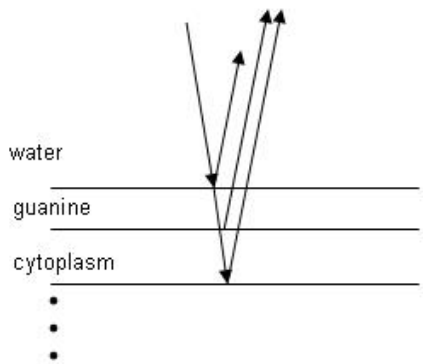

6) [10 pts] You’re at the gym, hanging on a bar suspended from the ceiling by two wires, as shown in the diagram. The bar’s mass is 22.3 kg, and your mass is 75.4 kg. The two wires are each 5.0 m long, and have a mass of 27.0 grams. You’re hanging 10% of the length of the bar from the middle (**not** at the bar’s middle) when you notice that each of the two wires is ‘humming’ (ie, vibrating).

a. What are the tensions in each wire (they are **not** the same!)?

b. What is the fundamental frequency of each of the two vibrating wires?

c. What is the beat frequency they produce when vibrating together?

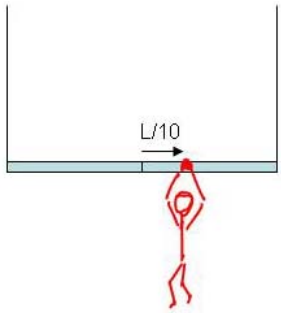

7) [10 pts] The drawing shows a wheel resting against a small step. The step height is h=0.12 m. The wheel (which can be considered to be a hoop, with I=mr2) has a mass of 2.50 kg and a radius of r=0.34 m. A horizontal force F is applied as shown, and when F is large enough, the wheel starts to 'climb' the step (that is, it loses contact with the ground). Calculate the magnitude of F when this happens.

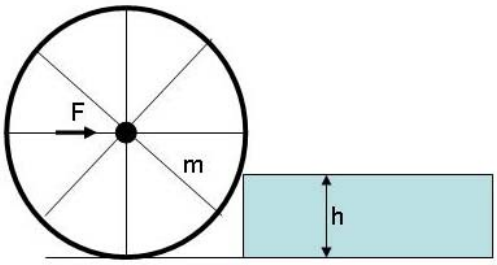

Happy holidays !